5 Load Determination and Structural Design Criteria

This chapter presents a summary of previous research and testing and outlines the recommended methods and criteria for use in the structural design of a community shelter. Other engineering factors and concepts involved in the structural design of a shelter are also discussed in this chapter. Detailed guidance concerning performance criteria for debris impact is presented in Chapter 6. The design criteria presented in this chapter are based on the best information available at the time this manual was published. Commentary intended to provide supplemental guidance to the design professional for this chapter and Chapter 6 is presented in Chapter 10.

5.1 Summary of Previous Guidance, Research, and Testing

To date, the majority of the research, testing, and analysis concerning an interior hardened room has been conducted by the Department of Civil Engineering at Texas Tech University (TTU) and the Department of Civil Engineering at Clemson University (Clemson). At TTU, the Wind Engineering Research Center (WERC) and the Institute for Disaster Research (IDR) managed this work. At Clemson, work was performed at the Wind Load Test Facility (WLTF). Both research universities have performed tests on various combinations of construction materials to determine their resistance to wind-induced forces and the impact of windborne and falling debris.

5.1.1 Previous Design Guidance

Design guidance for high-wind shelters was provided previously in the following FEMA publications and informational documents. (Details about missile tests and testing history are provided in the TTU report *Residential Shelter Design Criteria* in the sections titled "Wind-Generated Missiles" and "Previous Research on Missile Impact." Excerpts from these reports are provided in Appendixes E and F.)

- FEMA 342: *Midwest Tornadoes of May 3, 1999: Observations, Recommendations, and Technical Guidance*
- *National Performance Criteria for Tornado Shelters*
- FEMA 320: *Taking Shelter From The Storm: Building a Safe Room Inside Your House*

CROSS-REFERENCE

See Chapter 10 for descriptions of the FEMA publications listed here.

- FEMA TR-83B: *Tornado Protection: Selecting and Designing Safe Areas in Buildings*
- FEMA TR-83A: *Interim Guidelines for Building Occupant Protection From Tornadoes and Extreme Winds*

5.1.2 Previous Research and Missile Testing

TTU has performed the majority of the previous research and testing on tornado shelters and the effects of tornadoes on buildings. Clemson has conducted tests to determine the effects of hurricanes and lower-intensity tornadoes on buildings. The tests and research performed by these two institutions have included investigating wind speeds and associated loads, wind speed and associated debris impact, and the ability of the building materials to resist these loads and impacts. Tested construction materials (wall sections, doors, door hardware) that meet wind and missile impact criteria of this manual have been summarized and are listed in Appendixes E and F.

The following materials have been successfully tested as part of larger structural systems in laboratory studies developed specifically for shelter designs to resist missile impact:

- 6-inch to 12-inch concrete masonry units (CMU) with at least #4 vertical reinforcing steel, fully grouted in each cell, and horizontal joint reinforcement as required by masonry design code
- reinforced concrete (roof and wall sections at least 6 inches thick) with at least #4 reinforcing steel at 12 inches on center (o.c.) both horizontally and vertically
- 12-gauge steel sheets or heavier
- wood stud cavity walls filled with dry-stacked solid concrete block and encapsulated with plywood sheathing
- 3/4-inch plywood wall panels (when used as exterior cladding in combination with other materials)
- metal doors with at least 14-gauge skin (with interior supports)
- metal doors with less than 14-gauge skin clad with metal sheeting (14 gauge or heavier) attached

Building materials and how they are combined are very important in the design and construction of shelters. If these materials fail, wind may enter the shelter or the shelter itself may fail. Either situation may result in death of or injury to the shelter occupants. The design professional should select materials that will withstand both the design wind loads and the design impact loads.

Many window and door systems have been tested for their ability to resist wind and impact loads associated with high winds. The test protocols usually follow ASTM E 1233/E 330 and ASTM E1886/E 1996, the South Florida Building Code standard, or a similar test standard. Glass products have been produced that may withstand extreme pressures and missile impacts. The designer who wishes to incorporate windows into a shelter should pay close attention on the connections between the glass and the frame, and between the frame and the supporting wall system.

WARNING

Tests for doors and windows commonly used in hurricane-prone areas do not meet the criteria for extreme wind pressures and debris impacts recommended in this manual.

Although the ASTM standard defines how tests are to be performed, and some tests have been performed in hurricane regions of the southeast United States, the impact criteria used for those tests are less than those specified in this manual. Windows and door systems specified for use in extreme-wind shelters should be designed to meet the impact criteria presented in Chapter 6.

5.2 Determining the Loads on the Shelter

The loads that will act on a tornado or hurricane shelter will be a combination of vertical and lateral loads. One methodology of determining these loads is presented in Figure 5-1.

This manual recommends the use of ASCE 7-98 for the calculation of all loads acting on the shelter. Section 5.3 of this manual presents design guidance for calculating the wind pressures and loads associated with the design wind speed selected from Figure 2-2. Using this design wind speed, and the parameters specified in Section 5.3 of this manual for extreme-wind design, the designer should follow the methodology for wind design in Section 6 of ASCE 7-98. Once these loads are determined, the designer should combine all relevant loads acting on the shelter (e.g., dead, live, snow, rain, seismic) and apply them to the shelter. Guidance on load combinations is provided in Section 5.4 of this manual.

NOTE

ASCE 7-98 defines the MWFRS as the main wind force resisting system in a building or structure. Similarly, ASCE 7-98 defines C&C as the components and cladding elements of a building or structure.

5.3 Determining Extreme-Wind Loads

When wind loads are considered in the design of a building, lateral and uplift loads (discussed in Chapter 3) must be properly applied to the building elements along with all other loads. The design of the shelter relies on the approach taken in ASCE 7-98 for wind loads. For consistency, the designer may wish to use ASCE 7-98 to determine other loads that may act on the shelter. The *International Building Code* (IBC) 2000 and *International Residential Code* (IRC) 2000 also reference ASCE 7-98 for determining wind loads. These wind loads should then be combined with the gravity loads and the code-prescribed loads acting on the shelter in load combinations that are presented in Sections 5.4.1 and 5.4.2 of this manual.

NOTE

C&C elements include wall and roof members (e.g., joists, purlins, studs), windows, doors, fascia, fasteners, siding, soffits, parapets, chimneys, and roof overhangs. C&C elements receive wind loads directly and transfer the loads to other components or to the MWFRS.

Figure 5-1
Shelter design flowchart.

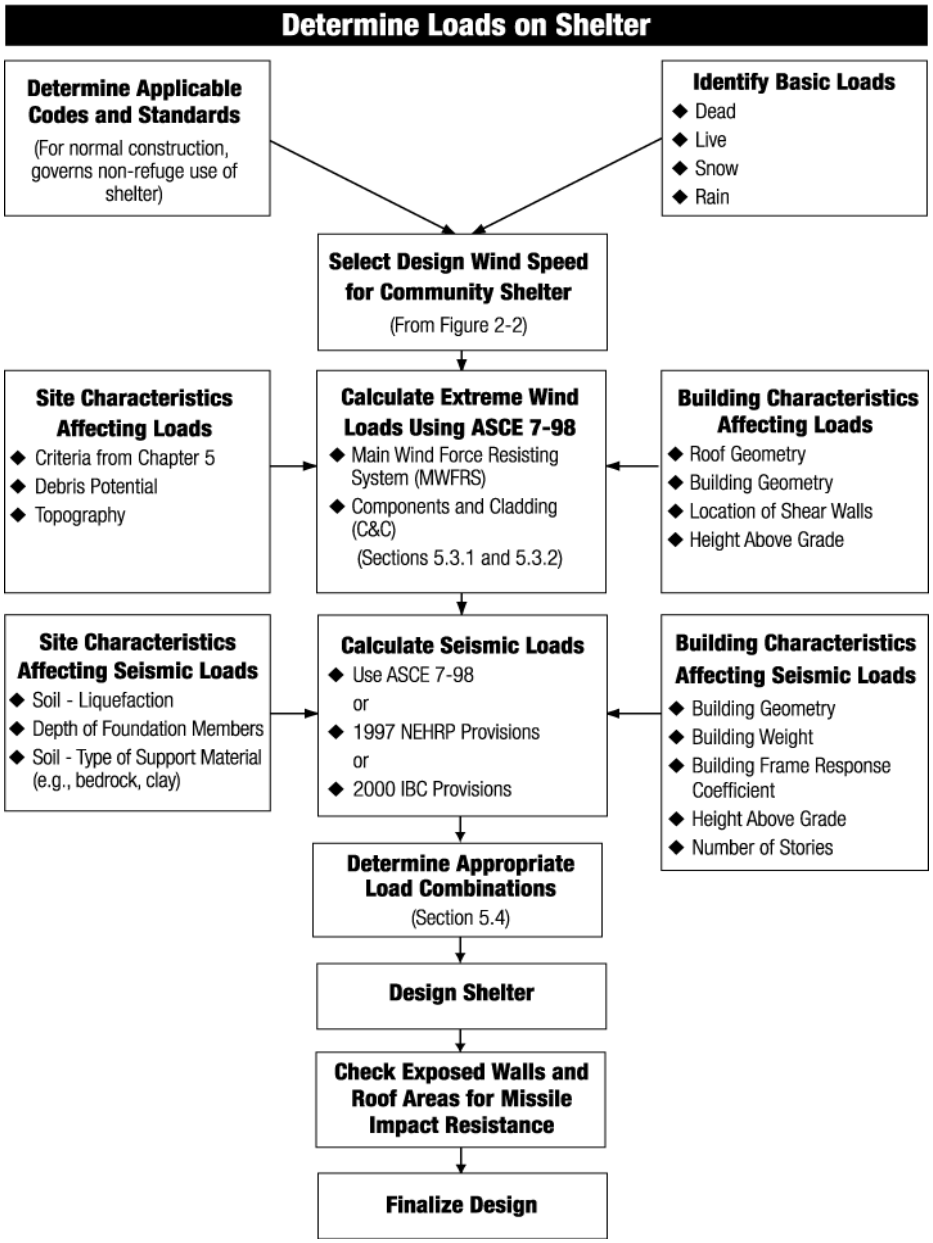

Design wind loads for buildings are generally treated separately for the design of the structural system and the design of the cladding and its attachment to the structural system. Design loads for the structural system of a shelter start with the basic loads from the applicable building code governing the non-refuge use of the shelter. The determination of design wind loads acting on the shelter is based on standard provisions and formulas (equations) for the Main Wind Force Resisting System (MWFRS) as defined in ASCE 7-98. The design of cladding and its attachment to the structural system are based on standard provisions and formulas for the components and cladding (C&C). Wall and roof panels should also be checked for out-of-plane loading associated with C&C loads for the appropriate tributary areas.

5.3.1 Combination of Loads – MWFRS and C&C

According to ASCE 7-98, the MWFRS is an assemblage of structural elements assigned to provide support and stability for the overall structure and, as a consequence, generally receives wind loading from all surfaces of the building. Elements of the building envelope that do not qualify as part of the MWFRS are identified as C&C and are designed using C&C wind loads. Some elements of low-rise buildings are considered part of the building envelope (C&C) or the MWFRS, depending upon the wind load being considered (e.g., the exterior walls of a masonry building). In the design of these masonry walls, the MWFRS provisions are used to determine the in-plane shear forces, and the C&C provisions are used to determine the out-of-plane design bending load.

The pressure (positive/inward or negative/outward suction) exerted by the wind flowing over and around a building varies with time and location on the building. The highest pressures occur over small areas for a very short time in the regions of a building where the wind flow separation is quite significant. This flow separation can cause small vortices to form that can cause much higher pressures in small localized areas. These flow separation regions generally occur along the edges of the roof and corners of the exterior walls. Therefore, the design wind pressures for the design of the C&C are higher when the tributary area for the element is small and located in a wind flow separation region. The design pressure for a C&C element can be over twice the pressure used to design the structural framing of the building. Proper assessment of the design wind pressures is critical to developing the design of a building's structural frame and the selection of appropriate exterior cladding.

The majority of the wind load provisions are based on wind tunnel modeling of buildings considering non-cyclonic, straight-line winds. Most wind engineers believe that the results from these wind tunnel tests can be used to determine wind pressure from hurricanes. Tornado wind fields are believed to be more complex than the winds modeled in wind tunnel tests that form the basis for the wind loads calculated in ASCE 7-98. However, in investigations of buildings damaged by tornadic winds, the damage is consistent with damage caused by the forces calculated by ASCE 7-98. For this reason, use of ASCE 7-98 provisions provides a reasonable approach to calculating wind loads for tornadoes, even though it is known that these winds are more complex than the wind fields used in the models.

Design wind loads can cause axial, in-plane, and out-of-plane forces to act on the same building element. The combination of these loads should be considered in the design of building walls. For example, consider the exterior reinforced masonry wall shown in Figure 5-2 . Depending on wind direction, the building walls carry different combined loads. For wind direction 1, the wall element shown acts as a shearwall and may experience axial, shear, and

Figure 5-2
MWFRS combined loads and C&C loads acting on a structural member.

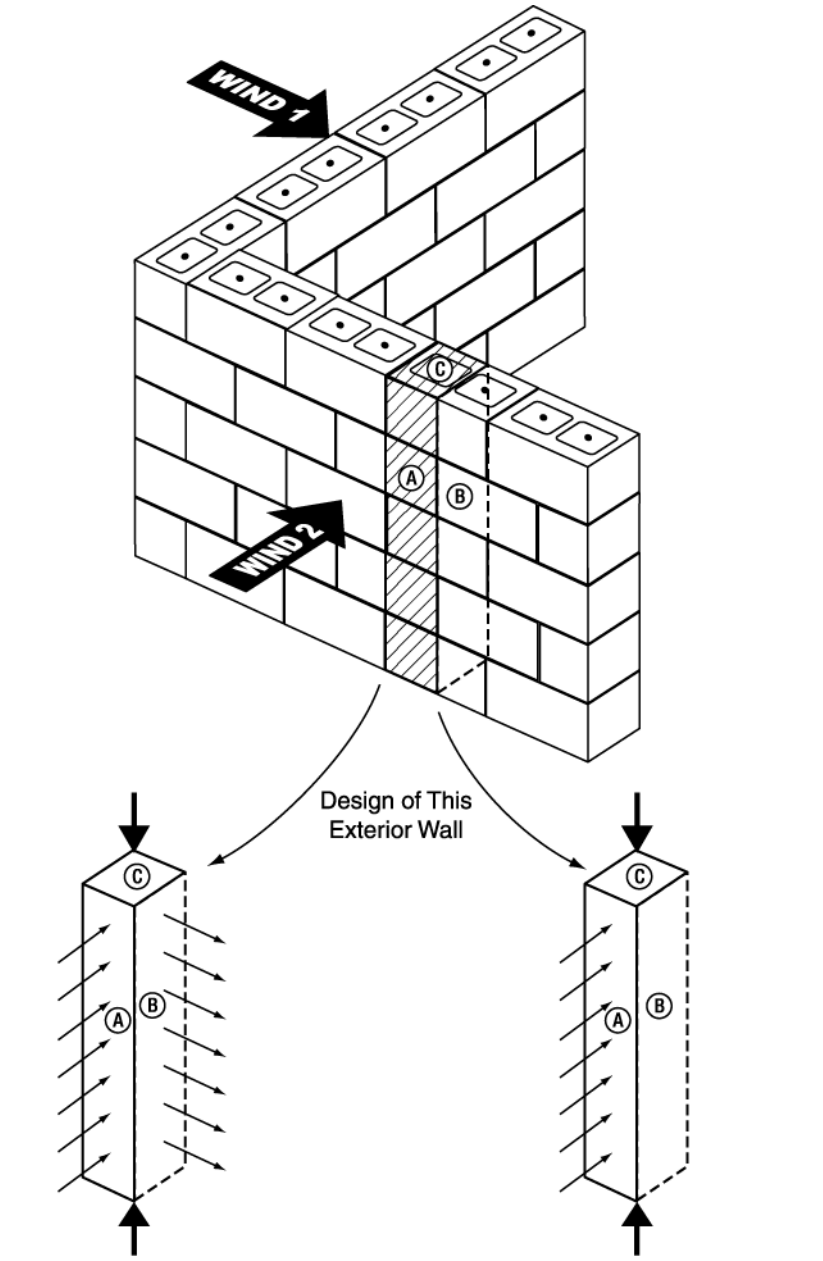

bending effects (from wind suction pressures) or axial and shear effects only. When either of these conditions exists, the designer should calculate and combine these loads using MWFRS loads. For wind direction 2, however, the loads on the wall are from axial and out-of-plane bending effects. For this condition, the designer should use MWFRS loads to calculate axial loads and C&C loads to calculate the bending loads when combining loads that affect the design of the wall.

Recommended design wind speeds for geographic regions of the United States are presented in Figure 2-2. Based on the historical and probabilistic data available, the project team believes a shelter can provide near-absolute protection for a specific geographic area (wind zone) if designed for the wind speed specified in the figure. It is important to note that this design approach is a refinement of the approach specified in the 1999 edition of the *National Performance Criteria for Tornado Shelters*, which is to use a design wind speed of 250 mph for all shelter designs throughout the United States.

It has been previously stated that when wind blows over a building, a myriad of forces act on the structure. These forces may cause the building to overturn, deform by racking or bending of components, or collapse and fail at the component junctions or joints. Chapter 3 describes how these wind loads affect a building or shelter. To calculate the loads corresponding to the design wind, the design professional should refer to ASCE 7-98 and Section 5.3.2 when calculating the wind pressures on the shelter.

5.3.2 Assumptions for Wind Calculation Equations Using ASCE 7-98

After the Risk Assessment Plan is completed, the next step in the shelter design process is to select the design wind speed from the map in Figure 2-2. There are four zones on the map that have corresponding wind speeds of 130 mph, 160 mph, 200 mph, and 250 mph. These wind speeds should be used to determine the wind-generated forces that act on either the structural frame or loadbearing elements of a building or shelter (MWFRS) and the exterior coverings of a building or shelter (C&C).

It is recommended that all wind loads, both MWFRS and C&C, be calculated using the wind load provisions in Section 6 of ASCE 7-98. When ASCE 7-98 is used for the design of tornado or hurricane shelters, only *Method 2 – Analytical Procedure* should be used. The design requirements for tornado and hurricane shelters do not meet the requirements for using *Method 1 – Simplified Procedure*. In addition, some of the pressure calculation parameters used in the design of a shelter should be different from those listed in ASCE 7-98 because detailed wind characteristics in tornadoes and hurricanes are not well understood. Based on the wind speed selected from Figure 2-2, the

following parameters are recommended for the calculation of wind pressures with *Method 2* of ASCE 7-98:

- Importance Factor (I) — I = 1.0
- Site Exposure — C
- Directionality Factor (K_d) — $K_d = 1.0$
- Internal Pressure Coefficient (GC_{pi}) — $GC_{pi} = +/- 0.55$
- Height of the shelter is not restricted

The importance factor (I) is set equal to 1.0. The importance factor for wind loads in ASCE 7-98 is designed to adjust the velocity pressure to different annual probabilities of being exceeded (different mean recurrence intervals [MRIs]). Since the wind speeds in Figure 2-2 are already based on very great MRIs (i.e., low exceedance probabilities), they do not need to be adjusted with the importance factor.

It is recommended that site Exposure C, associated with open terrain, be used to determine design wind forces for shelters. In severe tornadoes and hurricanes, ordinary structures and trees in wooded areas are flattened, exposing shelters to winds coming over open terrain. Also, very little is known about the variation of winds with height in hurricanes and tornadoes. Use of Exposure C is appropriate until the knowledge of localized winds, turbulence characteristics, and boundary layer effects of winds in hurricanes and tornadoes improves.

The directionality factor (K_d) is conservatively set at 1.0. This is done because wind directions may change considerably during a tornado or severe hurricane and a building may be exposed to intense winds from its most vulnerable direction. Therefore, the reduction of this factor allowed in ASCE for normal building design is not recommended for the design of a shelter.

The ASCE 7-98 equations for determining wind loads also include the topographic factor K_{zt}. Damage documentation in hurricane disasters suggests that buildings on escarpments experience higher forces than buildings otherwise situated. No specific observations on topographic effects in tornadic events are available. The designer is advised to avoid siting shelters in locations that are likely to experience topographic effects. If it is necessary to locate a shelter on top of a hill or an escarpment, requirements given in ASCE 7-98 for the topographic factor can be used when calculating wind pressures on shelters that are being designed for hurricane winds only.

The design wind loads/pressures for the MWFRS or the C&C of a building are based on the following factors: velocity pressure, an external gust/pressure

coefficient, and an internal gust/pressure coefficient. These coefficients are derived from several factors related to the wind field, the wind/structure interaction, and the building characteristics.

The velocity pressure equation (Equation 6-13, ASCE 7-98) is shown in Formula 5.1. The equation for pressure on a building surface for MWFRS for buildings of all heights (Equation 6-15, ASCE 7-98) is shown in Formula 5.2.

Formula 5.1 Velocity Pressure*

$$q_z = (0.00256)(K_z)(K_{zt})(K_d)(V^2)(I)$$

where: q_z = velocity pressure (psf) calculated at height z above ground
K_z = velocity pressure exposure coefficient at height z above ground
K_{zt} = topographic factor
K_d = directionality factor = 1.0
V = design wind speed (mph) (from Figure 2-2)
I = importance factor = 1.0

*From ASCE 7-98, EQ. 6-13

formula
Velocity Pressure

Formula 5.2 Pressure on MWFRS for Low-Rise Building*

$$p = (q)(G)(C_p) - (q_i)(GC_{pi})$$

where: p = pressure (psf)
q = q_z for windward walls calculated at height z above ground
q = q_h for roof surfaces and all other walls
G = gust effect factor
C_p = external pressure coefficients
$q_i = q_h$ = velocity pressure calculated at mean roof height
GC_{pi} = internal pressure coefficients = ±0.55

*From ASCE 7-98, EQ. 6-15

formula
Pressure on MWFRS for Low-Rise Building

The velocity pressure is related to height above ground, exposure, wind directionality, wind speed, and importance factor. Several of these factors account for the boundary layer effects of wind flowing close to the surface of the earth where it interacts with the terrain, buildings, and vegetation.

Values of the exposure factor (K_z) are presented in tabular form in ASCE 7-98. The value of K_z selected should be based on the height of the shelter above grade and the building exposure (Exposure C). The terrain speedup factor (K_{zt}) is based on the acceleration of straight winds over hills, ridges, or escarpments. As previously mentioned, the ASCE provisions for K_{zt} should be followed.

For the MWFRS, the gust effect factor (G) depends on wind turbulence and building dimensions. The gust effect factor can be calculated, or, for a rigid building, G = 0.85 is permitted by ASCE 7-98. The external pressure coefficient (C_p) for the design of the MWFRS is based on the physical dimensions and shape of the building and the surface of the building in relation to a given wind direction.

The equation for pressures on C&C and attachments (Equation 6-18, ASCE 7-98) is shown here in Formula 5.3.

formula

Pressures on C&C and Attachments

Formula 5.3 Pressures on C&C and Attachments*

$$p = (q_h)[(GC_p) - (GC_{pi})]$$

where: p = pressure (psf)
q_h = velocity pressure calculated at mean roof height
GC_p = external pressure coefficients
GC_{pi} = internal pressure coefficients = ±0.55

*From ASCE 7-98, EQ. 6-18

The internal pressure coefficient (GC_{pi}), which incorporates the gust factor (G), accounts for the leakage of air entering or exiting the building where the building envelope has been breached. This leakage creates a pressure increase or a vacuum within the building. The recommended value of GC_{pi} is ±0.55. This value, associated with partially enclosed buildings and applicable to both the MWFRS and C&C components, was selected for the following reasons:

1. In tornadic events, as discussed in Section 3.2.1, maximum wind pressures should be combined with pressure changes induced by atmospheric pressure change (APC) if the building is sealed or, like most shelters, nearly sealed. Although most buildings have enough air leakage in their envelopes that they are not affected by APC, shelters are very "tight" buildings with few doors and typically no windows. If venting is provided in the building envelope to nullify APC-induced pressures, there is a good chance that the building will qualify as a partially enclosed building as defined by ASCE 7-98. However, this venting would require a significant number of openings in the shelter to allow pressures to equalize. Allowing wind to flow through the shelter through large openings to reduce internal pressures (venting) could create an unsatisfactory environment for the occupants, possibly leading to panic among the occupants, injury, or even death. It is important to note that ventilation is needed to ensure that shelter occupants have sufficient airflow to remain safe, but that code-compliant ventilation is not sufficient to nullify APC-induced pressures. Designers who wish to eliminate the need for venting to alleviate APC-induced pressures should

use higher values of GC_{pi} (in shelter design, $GC_{pi} = \pm 0.55$ is recommended). Design pressures determined using wind-induced internal and external pressure coefficients are comparable to the pressures determined using a combination of wind-induced external pressure coefficients and APC-induced pressures. Thus, the resulting design will be able to resist APC-induced pressures, should they occur.

2. In hurricane events, tornadic vortices are often embedded in the overall storm structure. These tornadoes are considered small and less intense than tornadoes occurring in the interior of the country. However, swaths of damage have been noted in several hurricanes. It has not been confirmed whether these swaths are caused by localized gusts or unstable small-scale vortices. As a conservative approach, to design shelters better able to resist long-duration wind forces associated with landfalling hurricanes, designers should use high values of GC_{pi}. This approach will provide reliable and safe designs. It is particularly important that none of the C&C elements (e.g., doors, windows) fail during a windstorm and allow winds to blow through the shelter. The consequences could be the same as those described above for tornadoes.

The value of GC_p for C&C elements is related to the location on the building surface and the effective wind area of the element. For systems with repetitive members, the effective wind area is defined as the span length multiplied by the effective width. When long, slender, repetitive members (e.g., roof joists or rafters) are designed, the effective wind area may be taken as span length multiplied by 1/3 of the span length. It is not uncommon for the effective wind area for a C&C element to be different from the tributary area for the same element (see Figure 5-3). The effective wind area is used to select the coefficient used to calculate the magnitude of the design wind pressure, while the tributary area is the area over which the calculated wind pressure is applied for that specific C&C-designed element.

For cladding fasteners, the effective wind area should not be greater than the area that is tributary to an individual fastener. It should be noted that the external gust/pressure coefficient is constant and maximum for effective wind areas less than 10 ft^2 and constant and minimum for effective wind areas greater than 500 ft^2. If the tributary area of a component element exceeds 700 ft^2, the design wind pressure may be based on the main MWFRS provisions acting on that component.

Once the appropriate MWFRS and C&C wind pressures are calculated for the shelter, they should be applied to the exterior wall and roof surfaces of the shelter to determine design wind loads for the structural and non-structural elements of the shelter. After these wind loads are identified, the designer should assemble the relevant load combinations for the shelter.

Figure 5-3
Comparison of tributary and effective wind areas for a roof supported by open-web steel joists.

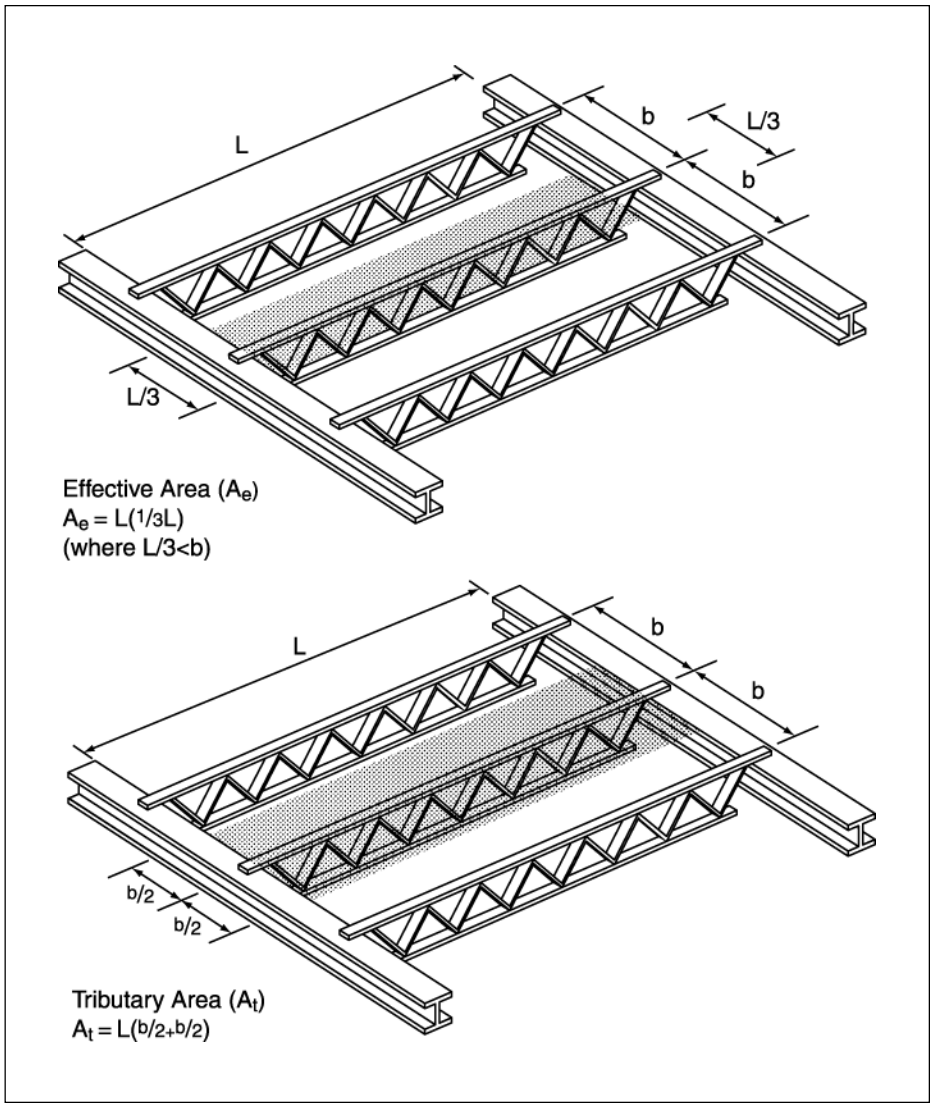

Finally, the designer should not reduce the calculated wind pressures or assume a lower potential for missile impacts on the exterior walls and roof surfaces of an internal shelter. Although a shelter inside a larger building, or otherwise shielded from the wind, is less likely to experience the full wind pressures and missile impacts, it should still be designed for the design wind pressures and potential missile impacts that would apply to a stand-alone shelter. There is no conclusive research that can quantify allowable reductions in design wind pressure for shelters within buildings or otherwise shielded from wind.

5.4 Load Combinations

Model building codes and engineering standards are the best available guidance for identifying the basic load combinations that should be used to design buildings. The design professional should determine the loads acting on the shelter area using the load combinations and conditions for normal building use as defined in the building code in effect or as presented in Section 2 of ASCE 7-98.

The designer should then calculate the extreme wind loads that will act on the shelter using the formulas from this chapter and from Section 6 of ASCE 7-98, for the extreme wind load (W_x). However, it is important to remember that the design wind speed selected from this guidance manual is for an extreme wind; therefore, extreme wind load combinations are provided in Sections 5.4.1 and 5.4.2. These load combinations are based on the guidance given in the *Commentary* of ASCE 7-98 for extreme wind events, are different from those used in either the model codes or ASCE 7-98 (Section 2), and should be used in addition to the basic load combinations.

The load combinations presented in Sections 5.4.1 and 5.4.2 of this manual have been peer reviewed by the Project Team and the Review Committee, but have not been extensively studied. Finally, the design of the shelter may be performed using either Strength Design (Load and Resistance Factor Design [LRFD]) or Allowable Stress Design methods (ASD).

5.4.1 Load Combinations Using Strength Design

The building code in effect should indicate the load combinations to be considered for the design of a building. In the absence of a building code, the designer should use the load combinations of Section 2.3.2 of ASCE 7-98 to ensure that a complete set of load cases is considered. For the MWFRS, C&C, and foundations of high-wind shelters, designers should also consider the following load cases (using W_x) so that the design strength equals or exceeds the effects of the factored loads in the following combinations (LRFD):

Load Combination 1: $1.2D + 1.0W_x + 0.5L$

Load Combination 2: $0.9D + 1.0W_x + 0.5L$

Load Combination 3: $0.9D + 1.2W_x$

where D = dead load, L = live load, and W_x = extreme wind load based on wind speed selected from Figure 2-2.

Wind loads determined from the wind speeds in Figure 2-2 are considered extreme loads. The wind speeds in Figure 2-2 have a relatively low probability of being exceeded, as noted in Section 10.2.4. For this reason, the load factor associated with these wind speeds is considered the same as for an

NOTE

When a shelter is located in a flood zone, the following load combinations in Section 5.4.1 should be considered:

- **In V zones and coastal A zones, the $1.0W_x$ in combinations (1) and (2) should be replaced by $1.0W_x + 2.0F_a$.**
- **In non-coastal A zones, the $1.0W_x$ in combinations (1) and (2) should be replaced by $1.0W_x + 1.0F_a$.**

extraordinary event, as suggested in the *Commentary* of ASCE 7-98. Since the extraordinary event is the source of the wind-induced load, a factored load of $1.0W_x$ is used when it is combined with another transient load such as live load, and a factored load of $1.2W_x$ is used when it is the only transient load assumed to act on the building. Dead load factors are 0.9 and 1.2, depending on whether the dead load counteracts the wind loads or adds to them. The load combinations shown above take into account both of these dead load actions.

Finally, the designer should consider the appropriate seismic load combinations in Section 2.3.2 of ASCE 7-98. Where appropriate, the most unfavorable effects from both wind and seismic loads should be investigated. Wind and seismic loads should not be considered to act simultaneously (refer to Section 9.2.2 of ASCE 7-98 for the specific definition of earthquake load, E). From the load cases of Section 2.3.2 of ASCE 7-98 and the load cases listed above, the combination that produces the most unfavorable effect in the building, shelter, building component, or foundation should be used.

NOTE

When a shelter is located in a flood zone, the following load combinations in Section 5.4.2 should be considered:

- **In V zones and coastal A zones, $1.5F_a$ should be added to load combinations (1) and (2) .**
- **In non-coastal A zones, $0.75F_a$ should be added to load combinations (1) and (2).**

5.4.2 Load Combinations Using Allowable Stress Design

The building code in effect should indicate the load combinations to be considered for the design of a building. In the absence of a building code, the designer should use the load combinations of Section 2.4.1 of ASCE 7-98, to ensure that a complete set of load cases is considered. For the MWFRS, C&C, and foundations of high-wind shelters, designers should also consider the following load cases (using W_x) so that the design strength equals or exceeds the effects of the factored loads in the following combinations (ASD):

Load Combination 1: $D + W_x + 0.5L$

Load Combination 2: $0.6D + W_x$

where D = dead load, L = live load, and W_x = extreme wind load based on wind speed selected from Figure 2-2.

As mentioned in Section 5.4.1, wind loads determined from the wind speeds in Figure 2-2 are considered extreme loads. At the same time, a shelter is required to protect its occupants during an extreme windstorm. When live load (transient load) is to be combined with wind load, live load is multiplied by a factor of 0.5; no reduction should be taken for wind loads under any circumstances. In addition, allowable stress should not be increased for designs based on the wind loads specified in this document.

Finally, the designer should consider the appropriate seismic load combinations in Section 2.4.1 of ASCE 7-98. Where appropriate, the most unfavorable effects from both wind and seismic loads should be investigated. Wind and seismic loads should not be considered to act simultaneously (refer to Section 9.2.2 of ASCE 7-98 for the specific definition of earthquake load, E.). From the load cases of Section 2.4.1 of ASCE 7-98 and the load cases listed above, the combination that produces the most unfavorable effect in the building, shelter, building component, or foundation should be used.

5.4.3 Other Load Combination Considerations

Concrete and masonry design guidance is provided by the American Concrete Institute International (ACI) and The Masonry Society. *Building Code Requirements for Structural Concrete* (ACI 318-99) and *Building Code Requirements for Masonry Structures* and *Specification for Masonry Structures* (ACI 530-99/ASCE 5-99/TMS 402-99, and ACI 530.1-99/ASCE 6-99/TMS 602-99) are the most recent versions of the concrete and masonry design codes. The load combinations for these codes may differ from the load combinations in ASCE 7-98, the IBC, and other model building codes.

When designing a shelter using concrete or masonry, the designer should use load combinations specified in the concrete or masonry codes, except when the design wind speed is taken from Figure 2-2 in this manual. For the shelter design wind speed, the extreme wind load (W_x) should be determined from the wind pressures acting on the building, calculated according to ASCE 7-98 and the provisions and assumptions stated in Section 5.3 of this manual.

The extreme nature of the design wind speed and the low probability of occurrence was considered by the Project Team in its review of the load combinations for the model codes, ASCE 7-98, and the concrete and masonry codes. When this extreme-wind load is used in combination with dead and live loads, the load combinations provided in Section 5.4.1 or 5.4.2 of this manual should be used. Based on these considerations, no reduction of loads or increases in allowable stresses are recommended.

5.5 Continuous Load Path

Structural systems that provide a continuous load path are those that support all loads acting on a building: laterally and vertically (inward and outward, upward and downward). Many buildings have structural systems capable of providing a continuous load path for gravity (downward) loads, but they are unable to provide a continuous load path for the lateral and uplift forces generated by tornadic and hurricane winds.

A continuous load path can be thought of as a "chain" running through a building. The "links" of the chain are structural members, connections between members, and any fasteners used in the connections (e.g., nails, screws, bolts, welds, or reinforcing steel). To be effective, each "link" in the continuous load path must be strong enough to transfer loads without permanently deforming or breaking. Because all applied loads (e.g., gravity, dead, live, uplift, lateral) must be transferred into the ground, the load path must continue unbroken from the uppermost building element through the foundation and into the ground.

In general, the continuous load path that carries wind forces acting on a building's exterior starts with the non-loadbearing walls, roof covering and decks, and windows or doors. These items are classified as C&C in ASCE 7-98. Roof loads transfer to the supporting roof deck or sheathing and then to the roof structure made up of rafters, joists, beams, trusses, and girders. The structural members and elements of the roof must be adequately connected to each other and to the walls or columns that support them. The walls and columns must be continuous and connected properly to the foundation, which, in turn, must be capable of transferring the loads to the ground.

Figure 5-4 illustrates typical connections important to continuous load paths in masonry, concrete, or metal frame buildings (e.g., residential multi-family or non-residential buildings); Figure 5-5 illustrates a continuous load path in a typical commercial building. Figure 5-4 also illustrates the lateral and uplift wind forces that act on the structural members and connections. A deficiency in any of the connections depicted in these figures may lead to structural damage or collapse.

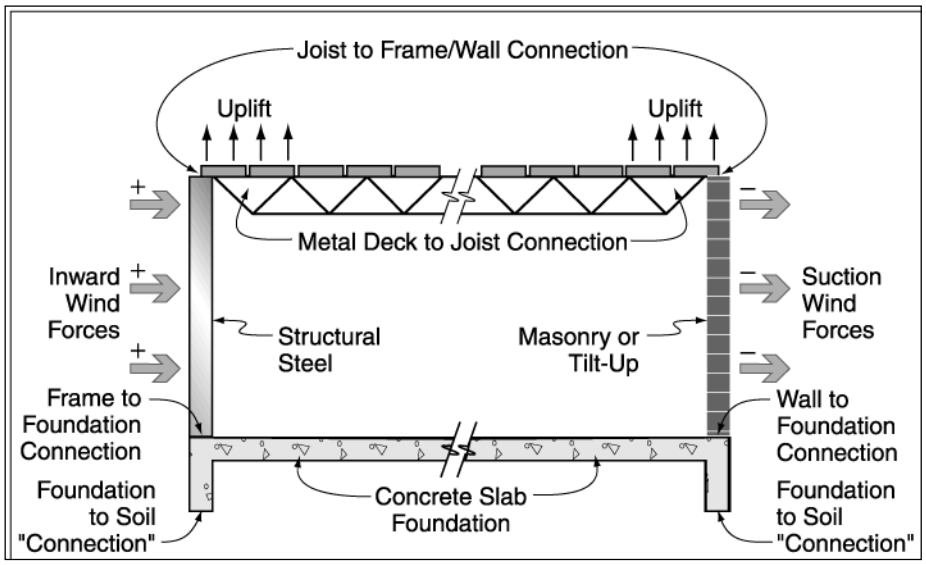

Figure 5-4
Critical connections important for providing a continuous load path in a typical masonry, concrete, or metal-frame building wall. (For clarity, concrete roof deck is not shown.)

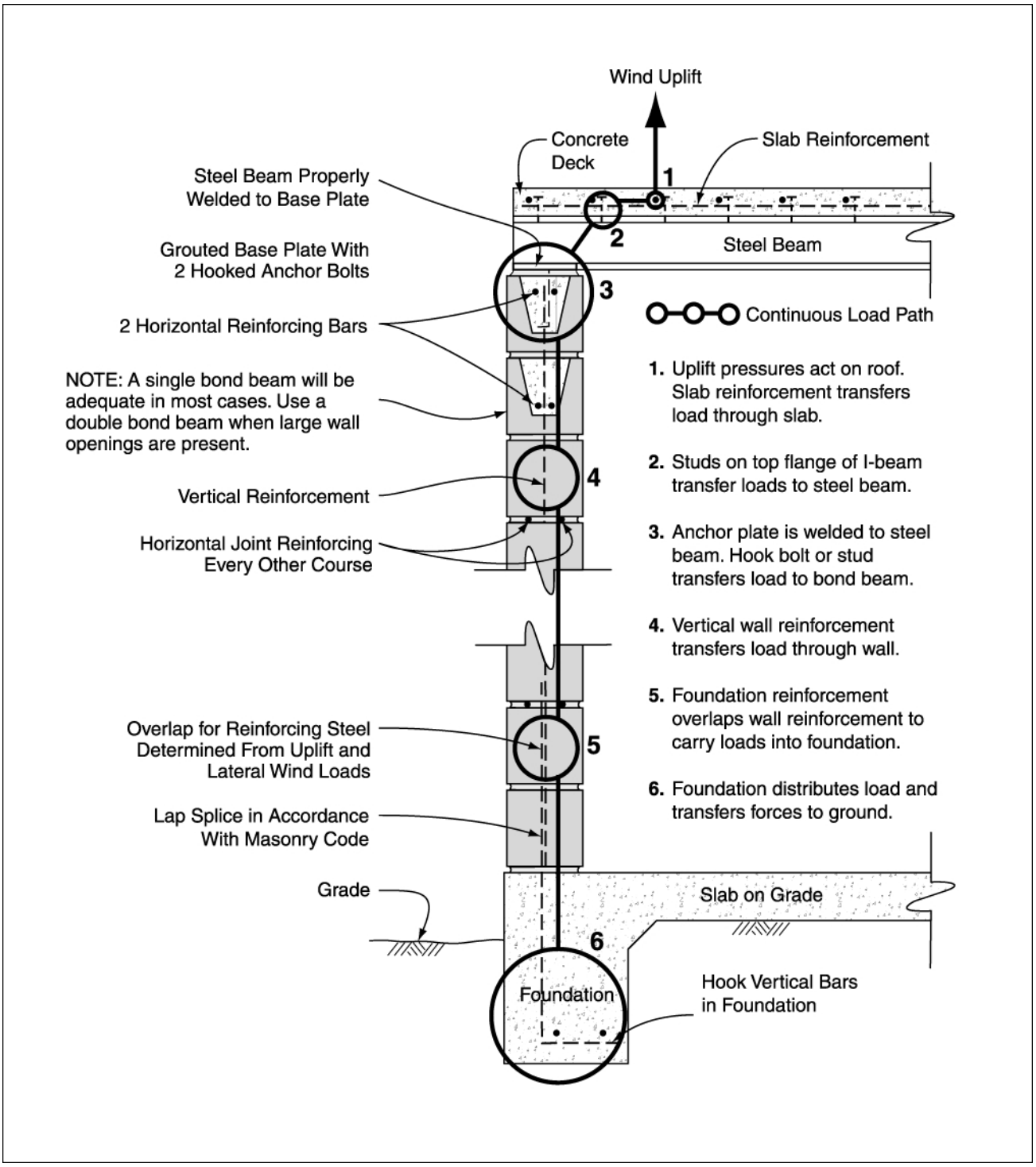

Figure 5-5 Continuous load path in a reinforced masonry building with a concrete roof deck.

In a tornado or hurricane shelter, this continuous load path is essential and must be present for the shelter to resist wind forces. The designers of shelters must be careful to ensure that all connections within the load path have been checked for adequate capacity. Again, designers should refer to ASCE 7-98 and the design wind speed and parameters specified in this manual when determining the loads on the building elements and ensure that the proper pressures are being used for either MWFRS or C&C building elements.

5.6 Anchorages and Connections

A common failure of buildings during high-wind events is the failure of connections between building elements. This failure is often initiated by a breach in the building envelope, such as broken doors and windows or partial roof failure, which allows internal pressures within the building to rapidly increase. This phenomenon is discussed in Chapter 3; the schematic in Figure 3-2 illustrates the forces acting on buildings when a breach occurs.

Anchorage and connection failures can lead to the failure of the entire shelter and loss of life. Therefore, the design of all anchorages and connections should be based on the C&C loads calculated from ASCE 7-98 and on the specified design assumption stated in Section 5.3.2 of this manual. All effects of shear and bending loads at the connections should be considered.

5.6.1 Roof Connections and Roof-to-Wall Connections

Adequate connections must be provided between the roof sheathing and roof structural support, steel joists, and other structural roofing members and walls or structural columns. These are the connections at the top of the continuous load path and are required to keep the roof system attached to the shelter.

Reinforcing steel, bolts, steel studs, welds, screws, and nails are used to connect roof decking to supporting members. The size and number of these connections required for a shelter depend on the wind pressures that act on the roof systems. Examples of connection details that have been designed for some of these conditions may be found in Appendixes C and D for cast-in-place and pre-cast concrete shelter designs.

Figure 5-6 shows damage to a school in Oklahoma that was struck by a tornado. The school used a combination of construction types: steel frame with masonry infill walls and load bearing unreinforced masonry walls. Both structural systems support open-web steel joists with a lightweight roof system composed of light steel decking, insulation, and a built-up roof covering with aggregate ballast.

Figure 5-6
Failure in this load path occurred between the bond beam and the top of the unreinforced masonry wall. This school building was in the path of an F4 tornado vortex.

The figure highlights a connection failure between a bond beam and its supporting unreinforced masonry wall as well as the separation of the bond beam from roof bar joists. See Figure 5-5 for an illustration of connections in a reinforced masonry wall that are likely to resist wind forces from a tornado or hurricane. Note that four connection points—between the roof decking and joists, the joist and the bond beam, the bond beam and the wall, and the wall to the foundation—are critical to a sound continuous load path.

5.6.2 Foundation-to-Wall Connections and Connections Within Wall Systems

Anchor bolts, reinforcing steel, and imbedded plate systems properly welded together, and nailed mechanical fasteners for wood construction, are typical connection methods used to establish a load path from foundation systems into wall systems. These connections are the last connections in the load path that bring the forces acting on the building into the foundation and, ultimately, into the ground. The designer should check the ability of the connector to withstand the design forces and the material into which the connector is anchored.

Figure 5-7 shows two columns from a building that collapsed when it was struck by the vortex of a weak tornado. Numerous failures at the connection between the columns and the foundation were observed. Anchor bolt failures were observed to be both ductile material failures and, when ductile failure did not occur, embedment failures.

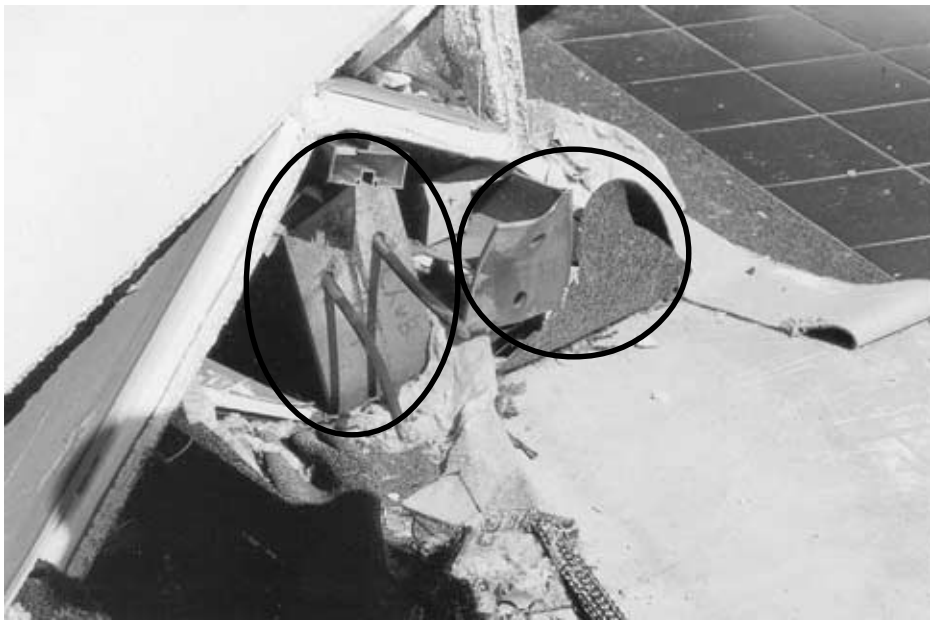

Figure 5-7
These two steel columns failed at their connection to the foundation. The anchor bolts that secured the column released from the concrete (embedment failure) while the anchor bolts that secured the column on the right experienced a ductile failure.